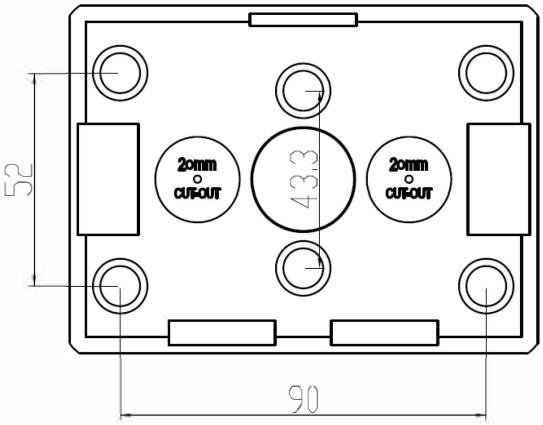

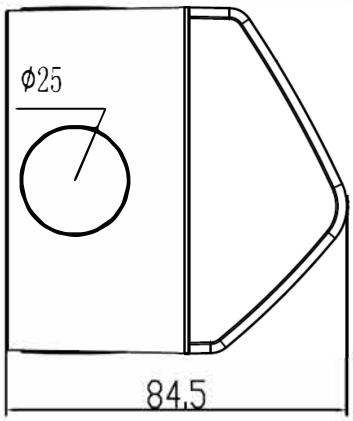

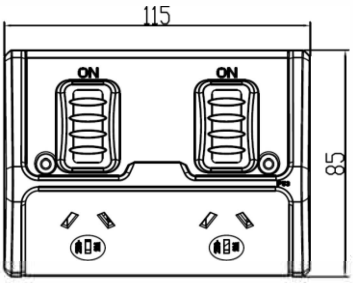

WGP02

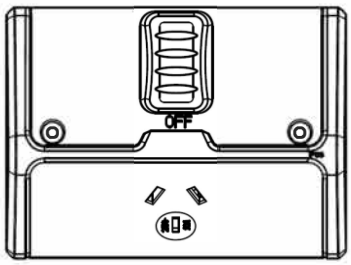

WGP01

Technical Specifications:

Usage:	Industrial Areas subject to wash-down Outside
Voltage:	250V AC 50HZ
Amp:	10A/15A
IP Rating:	IP53
Boby Material:	Polycarbonate

Item Code	Description	MAX. CABLE (mm)	Nominal area of conductor (mm²)
WPGP01	Weatherproof Single GPO IP53 250V 10A	Max. 24	1
WPGP01-15	Weatherproof Single GPO IP53 250V 15A		2.5
WPGP01S	Weatherproof Single GPO IP53 250V 10A Shallow		2.5
WPGP02	Weatherproof Double GPO IP53 250V 10A		1
WPGP02-15	Weatherproof Double GPO IP53 250V 15A		2.5
WPGP02S	Weatherproof Double GPO IP53 250V 10A Shallow		2.5