JINHANG Floodlight V7 100W

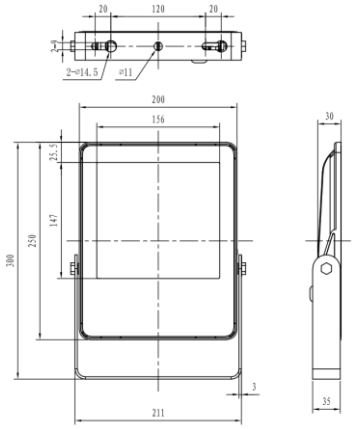

MODEL	CS-JH-FL13-100-5000K-NZ	**CRI (Ra)**	75
LED BRAND	Nichia	**SDCM**	<5
DRIVER BRAND	Driver on board	**HOUSING COLOUR & MATERIAL**	Black, Magnesium aluminum alloy/tempered glass
INPUT VOLTAGE (V)	AC 120-277V	**IP**	IP66
PROTECTION CALSS	Class I	**IK**	IK07
SPD (KV)	4	**AMBIENT TEMPERATURE (°C)**	40°C
POWER FACTOR (PF)	≥0.99	**OPERATING TEMPERATURE (°C)**	-40°C ~ +40°C
WATTAGE (W)	100W	**DIMMABLE (Y/N)**	No
FLICKER FREE (Y/N)	Yes	**INSTALLATION TYPE**	Bracket Mount
LUMEN OUTPUT (LM)	12,000 LM	**DIMENSION (mm)**	L250 x W200 x H30 mm
EFFICACY (LM/W)	120 LM/W	**NET WEIGHT (kg)**	1.6Kg ±0.2
COLOUR TEMPERATURE	5000K	**LIFESPAN (hr.)**	≥100,000 hrs.
BEAM ANGLE (°)	120°	**WARRANTY (yr.)**	5 yrs.